Thermoplastic Insulated Empty Distribution Box- Wall Mounting

MADE IN AUSTRIA

PCE by HäCO

Series M-BOX

"สะดวก ปลอดภัย
ได้มาตรฐาน
ผลิตจาก Austria"

Thermoplastic Insulated Empty Distribution Box-Wall Mounting *Series M-BOX*

Series *M-BOX* :

- High-Quality Thermoplastic Material
- IP65 Weatherproof
- Window Up to 6, 8, or 16 Modules
- Many Combination Possibilities of Housings and Sockets without Mechanical Use
- Numerous Equipment

"สะดวก ปลอดภัย ได้มาตรฐาน ผลิตจาก Austria"

รูปตัวอย่าง *M-BOX* :

*สามารถเลือกประกอบได้ทุกฟังก์ชั่นการใช้งาน

วิธีเชื่อมต่อแบบต่างๆ

ภาพประกอบชิ้นส่วนต่างๆ

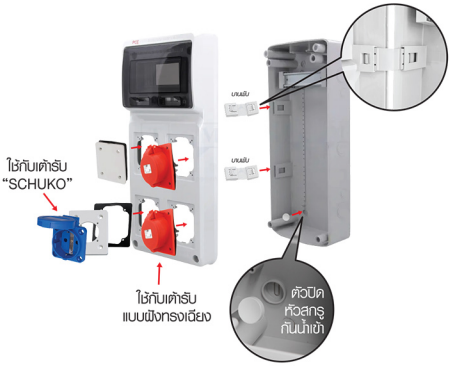

M-Box Series : Price list
รายการราคา : รุ่นเอ็มบ็อกซ์

Cat.No. *1518063*

3 Gang Socket 80x97 mm.
MCB 6 Module IP65
(H490 x W125 x D107 mm.)

Price *1,800.-*

Cat.No. *1518083*

4 Gang Socket 80x97 mm.
MCB 8 Module IP65
(H506 x W230 x D150 mm.)

Price *2,400.-*

Cat.No. *1518133*

6 Gang Socket 80 x 97 mm.
MCB 16 Module IP65
(H506 x W330 x D150 mm.)

Price *3,200.-*

Cat.No. *1518134*

Extend Box
MCB 13 Module IP65
(H77 x W330 x D150 mm.)

Price *3,400.-*

Cat.No. *1518000*

Blanking Plate
(H80 x W97 mm.)

Price *80.-*

Cat.No. *1518105*

Adaptor for Schuko
(H50 x W50 mm.)

Price *80.-*

Cat.No. *105-8B*

Flush "SCHUKO" Socket
16A 230V 2P+E
(H50 x W50 mm.)

Price *195.-*

Flanged Sockets Sloping : เต้ารับแบบฝังทรงเฉียง

ชนิดกันฝุ่น

ชนิดกันน้ำ

	16A 3p=6h	16A 4p=6h	16A 5p=6h	32A 3p=6h	32A 4p=6h	32A 5p=6h
	230V~	400V~	400V~	230V~	400V~	400V~
	Cat.No.	Cat.No.	Cat.No.	Cat.No.	Cat.No.	Cat.No.
IP44	413-6V	414-6V	415-6V	423-6V	424-6V	425-6V
ราคา	*195.-*	*215.-*	*285.-*	*310.-*	*360.-*	*400.-*
IP67	4132-6V	4142-6V	4152-6V	4232-6V	4242-6V	4252-6V
ราคา	*355.-*	*395.-*	*495.-*	*520.-*	*535.-*	*550.-*

Event Technology Midnight Series

023-6x IP44

223-6x IP44

315-6x IP44

94325000 IP44

9441480 IP54

Plugs and Sockets
"Camouflage Series"

0152-6u IP67

3152-6u IP67

777152-6u IP67

20168u IP66/IP68
+ 20352-8u

20051-u IP66/IP68

eMobility - Charging Stations

Charging Station eMobility - Mobile (Home/Industry)

- Mobile charging station solid rubber series SCHREMS acc. IEC61851
- Dimension: HxWxD = 255x400x300 mm.
- Input: 2m cable H07RN-F 5G2,5 with CEE plug 16A 5P 400V
- 1x Charging socket Type 2, 20A 480V 3P with e-lock 24V and hinged lid
- 1x Charge controller with 1x differential RCD modul
- 1x Contactor 4P AC3 12, 5kW/400V
- 1x Indicator lights error/charging/connected
- Ready wired to use
- IP54
- For industry and private use

PRCD-S+

The crucial PLUS in safrty!!

Mobile Personal Protection Device to Prevent Electrical Injury Especially on Construction Sites.

PCE's *PRCD-S+* Protects the user against incorrect electrical installations.

- ✓ N or L conductor interrupted
- ✓ External voltage on the PC conductor
- ✓ Surge Voltage
- ✓ Wiring errors (L and PE conductor reversed)
- ✓ PE conductor interrupted
- ✓ Undervoltage or voltage failure
- ✓ DC voltage
- ✓ Fault currents with rated values of 30mA (or 10mA)

967011355 *IP55*

CEE Diagnostic Plug with LED Display

CEE Diagnostic Plug* with LED display

- The practical helper for all electricians in industry, craft and on construction sites!!
- Multiple display - and diagnostic functions

- ✓ Rotary field check
- ✓ Phase conductor check
- ✓ Neutral conductor check
- ✓ Protective earth conductor check
- ✓ IP20

*Only for temporary testing period allowed. (not for permanent use)

Display diagnostic plug:

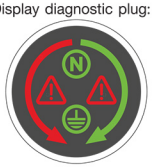

CEE Current Measurement Plug

Current measurement plug* 16A (L1-L2-L3)

- The new CEE current measurement test adapter allows a simple and easy measurement of each single phase L1-L2-L3 with a standard clamp meter and offers an optional rotation field check

Example with connected plug, connector and clamp meter.

Technical data

✓ Entry:	CEE Plug 16A 400V 5P 6h
✓ Outlet:	CEE Connector 16A 400V 5P 6h
✓ Ingress protection:	IP44 Splashproof
✓ Current measurement:	L1/L2/L3 with clamp meter (not included)
✓ Rotation field check:	LED light (optional)

- Rotation clockwise (green)
- Rotation counter clockwise (red)
- Phase missing (no light)

*Only for temporary use.

CEE - Motor Protection Plugs PKZMO (IP67) with Rotary Lever

IP67
watertight

CEE - Motor protection plug PKZM0
with phase inverter and rotation field check IP67

- with phase inverter and rotation field check
- cable gland 16A 5P M25
  32A 5P M32
- 400V~50/60Hz 5P=6h
- 500V version on request
- IP67 Watertight

Setting Range	16A / 400V / 6h	32A / 400V / 6h
	5P	5P
1.0 - 1.6A	587150163	587250163
1.6 - 2.5A	587150253	587250253
2.5 - 4.0A	587150403	587250403
4.0 - 6.3A	587150633	587250633
6.3 - 10A	587151003	587251003
10 - 16A	587151603	587251603
16 - 20A		587252003
20 - 25A		587252503
25 - 32A		587253203

CEE - Motor Protection Plugs Contactor Up to 7.5kW

CEE - Motor protection plug connector up
to 5.5kW (16A) and 7.5kW (32A)

Technical data:

- ✓ Enclosure material: PC/ABS
- ✓ Protection degree: IP44
- ✓ IK standard acc. to EN50102: IK09
- ✓ Temperature range: -25˚C bis +40˚C
- ✓ Large connection area

Designs:

- ✓ with rocker switch ON/OFF and MANUAL/AUTOMATIC for the use of a float switch
- ✓ with phase inverter plug
- ✓ Rotation field check - anticlockwise phase sequence
- ✓ Operating display - shows the voltage supply of the contactor and therefore of the consumer load
- ✓ External reset switch for the motor protection relay
- ✓ Cable entry:
  Bottom part: 1x cable gland M25 (Ø13-18mm) at 16A
  and M32 (Ø13-20mm) at 32A
  Top part: 1x cable gland M16 (Ø4-10mm) for float switch
  (separate drill hole marking for a further M16 cable gland)

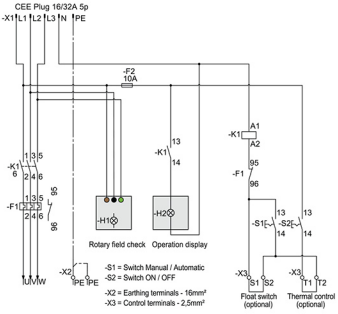

•• The CEE motor protection plug up to 7.5 kW provides reliable protection for thermal overloads and short circuits. It is used mainly for switching and the protection of three phase AC motors up to 7.5 kW (400V) on pumps, circular saws and industrial motors etc

สินค้าพิเศษที่สามารถสอบถามสั่งซื้อได้

CEE Angled Plugs

8013-6 IP44

80142-6 IP67

CEE Flanged Angle Plugs

777713-6 IP44

777132-6 IP67

CEE Flanged Plugs

TURBO diode TERMINALS

615-6 32A
625-6 32A IP44

6152-6TT 16A
6252-6TT 32A IP67

CEE Wall Mounted Plug

95225-6 IP44

535-6 IP66/IP67

CEE Wall Socket COMBO

9215-6 IP44

9215-6w IP44

CEE Wall Socket COMBOPOL

96061550 IP44

96061552 IP44

CEE Flanged Sockets Sloping – Lockable with Switch

413-6f66 IP44

TURBO diode TERMINALS

Extra-Low Voltage

•24V and 42V •DC 50/60 Hz •100-500Hz

083-3v IP44

2622v IP67

Multiple – Socket Outlet

94325102 IP44
94326102 IP67

9432000* IP44
9432001* IP67

9432006 IP44
9432007 IP67

Container Plug and Sockets

0242-3v IP67

78242-6 IP67

TAURUS Series Only Solid Rubber

05622-s IP44

25621-s IP44

253622-s IP44

Plug and Socket 7-Poles

027-6v IP44/IP54

8027-6v IP44/IP54

2272-6v IP66/IP67

8227-6v IP44/IP54

Distribution Boxes with Suspension Hook

9033031 IP44

9033073 IP44

Solid Rubber Distribution Boxes – Wall Mounting / Mobile

9543014 IP54/IP67

9240862 IP54/IP67

9227142 IP54/IP67

9504124 IP54/IP67

9473300 IP44

9216051 IP54

Thermoplastic Distribution Boxes DELTA / Mobile

9028738 IP54/IP67

9013031 IP54/IP67

9605153 IP54/IP67

9134124 IP54

9013022 IP54

PCE by HaCO

CONTACT / ข้อมูลติดต่อ

E. & O. E.
ผิด ตก ยกเว้น

Ref.Code: PCE1120

หมายเหตุ : รายละเอียดสินค้าสามารถเปลี่ยนแปลงได้โดยไม่ต้องแจ้งให้ทราบล่วงหน้า
สินค้ายังไม่รวมภาษีมูลค่าเพิ่ม

Remark : Prices are subjected to change without prior notice